Military Institute of Science and Technology

Department of Electrical, Electronic and Communication Engineering

EECE 477: POWER SYSTEM PROTECTION

Comprehensive Study Report: Fault Analysis and Equipment Selection

Prepared by:
Sabyasachi Monem
ID: 202216077
Section: B

Submitted to:
Maj Shah Mohazzem Hossain
EECE Department
MIST

April 5, 2026

Introduction

Reliable fault detection and protection coordination are essential for safe operation of power distribution systems. This report presents a comprehensive protection study of a Bangladesh Rural Electrification Board (BREB) radial distribution feeder supplied through a 33/11 kV step-down transformer [1]. The study covers analytical fault current calculation using symmetrical component theory, simulation-based verification in MATLAB/Simulink, selection of appropriate current transformers and circuit breakers, and design of a coordinated overcurrent relay protection scheme. The objective is to ensure fast, selective, and reliable protection of the feeder under both three-phase and single-line-to-ground fault conditions [2].

I. Project Objectives

- **Fault Analysis:** Calculate 3-phase and SLG fault currents for an 11 kV radial feeder.
- **System Modeling:** Develop a MATLAB/Simulink model to simulate transient fault behavior.
- **Validation:** Verify analytical hand calculations against simulation results.
- **Equipment Selection:** Specify CB and CT ratings based on maximum fault levels.
- **System Safety:** Design a reliable scheme for rapid fault isolation and protection.

Task (a): Analytical Fault Analysis

I. System Data and Base Values

A. Selected Base Values

The system base power is defined as $S_{\text{base}} = 5X$ MVA where $X = 7$, the last digit of my class roll number. The transformer is rated at $1X = 17$ MVA. Appropriate base voltages are selected for each side of the transformer.

Table 1: System Base Values ($X = 7$)

Parameter	Symbol	Value
Base Apparent Power	S_{base}	57 MVA
Transformer Rating	$S_{\text{T,rated}}$	17 MVA
Base Voltage (HV side)	$V_{\text{base,HV}}$	33 kV
Base Voltage (LV side)	$V_{\text{base,LV}}$	11 kV
Base Current (LV side)	$I_{\text{base,LV}}$	2,991.75 A
Pre-fault Voltage	V_f	1.0 pu

The base current and impedance on the LV side are calculated as:

$$I_{\text{base,LV}} = \frac{S_{\text{base}}}{\sqrt{3}\,V_{\text{base,LV}}} = \frac{57{,}000{,}000}{\sqrt{3} \times 11{,}000} = 2991.75\,\text{A} \tag{1}$$

$$Z_{\text{base,LV}} = \frac{V_{\text{base,LV}}^2}{S_{\text{base}}} = \frac{11^2}{57} = 2.1228\,\Omega \tag{2}$$

B. System Parameters (Per-Unit)

Table 2: System Parameters in Per-Unit

Component	Parameter	Value (pu)
Generator	$Z_g^{(1)}$	$j0.15$
Generator	$Z_g^{(0)}$	$j0.08$
Transformer (17 MVA rated)	$X_T^{(1)}$ (at 17 MVA)	$j0.05$
Transmission line (each)	$Z_{\text{line}}^{(1)}$	$0.07 + j0.07$
Transmission line (each)	$Z_{\text{line}}^{(0)}$	$0.14 + j0.14$

II. Transformer Impedance Base Conversion

The transformer is rated at 17 MVA; its reactance must be converted to the 57 MVA system base before constructing the sequence networks:

$$X_{T,\text{new}} = X_{T,\text{old}} \times \frac{S_{\text{new}}}{S_{\text{old}}} = 0.05 \times \frac{57}{17} = 0.1676 \text{ pu} \tag{3}$$

$$Z_T = j0.1676 \text{ pu} \tag{4}$$

III. Sequence Networks

The positive, negative, and zero sequence networks for the given radial distribution system are constructed and shown in Fig. 1. Note that the Δ–Y_g transformer blocks zero-sequence current from the generator side.

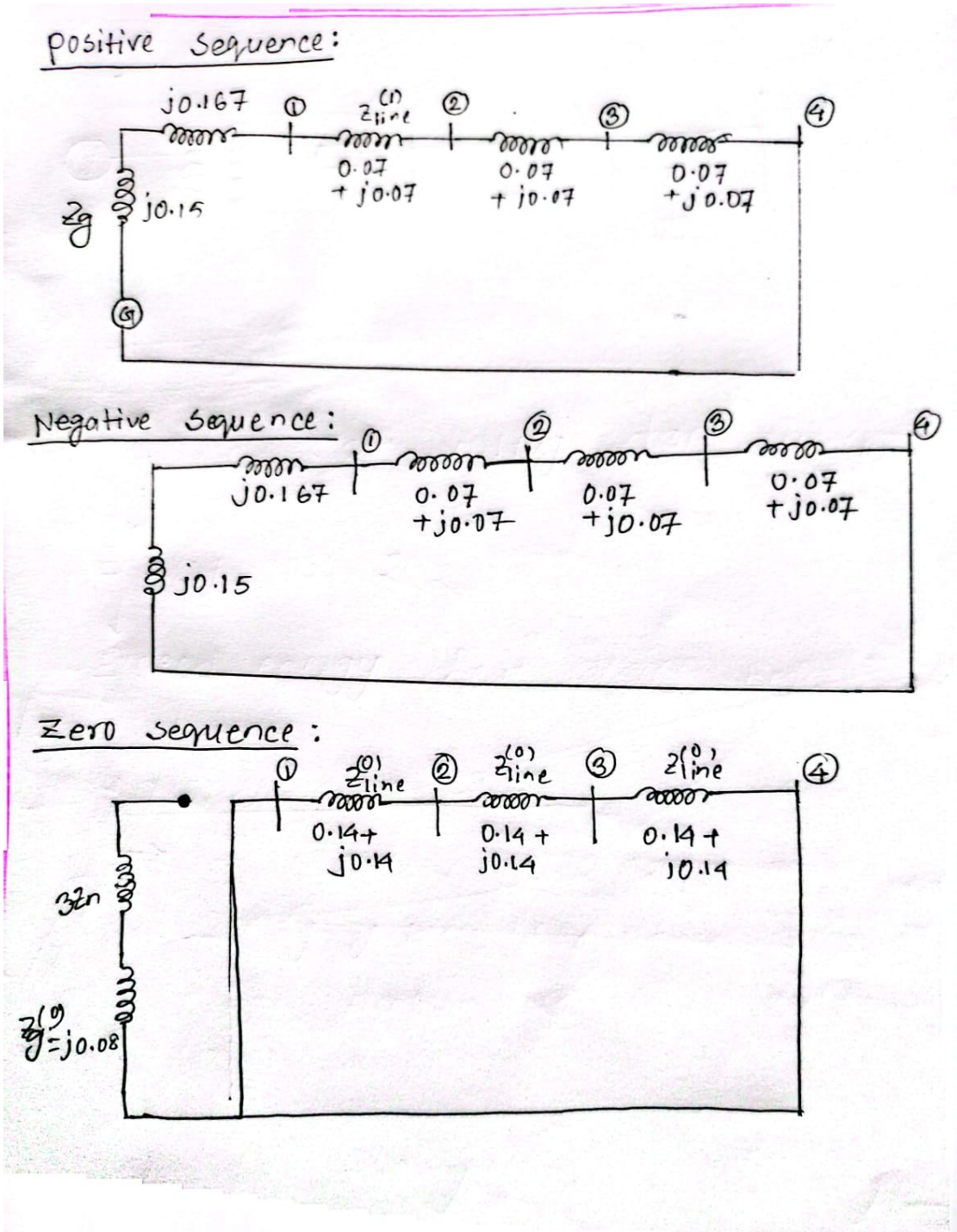

Figure 1: Positive, Negative, and Zero Sequence Networks ($X = 7$, $Z_T = j0.1676$ pu, $Z_{\text{line}}^{(1)} = 0.07 + j0.07$ pu, $Z_{\text{line}}^{(0)} = 0.14 + j0.14$ pu).

IV. Positive Sequence Network

A. Series Impedance: Generator and Transformer [3]

The generator and transformer are in series between the internal source and Bus-1:

$$Z_{G1}^{(1)} = Z_g^{(1)} + Z_T = j0.15 + j0.1676 = j0.3176 \text{ pu} \tag{5}$$

B. Line Impedances

Each line section has identical positive-sequence impedance:

$$Z_{12}^{(1)} = Z_{23}^{(1)} = Z_{34}^{(1)} = 0.07 + j0.07 \text{ pu} \tag{6}$$

C. Y_{bus} Formation (Positive Sequence)

The element admittances are:

$$Y_{g1} = \frac{1}{Z_{G1}^{(1)}} = \frac{1}{j0.3176} = -j3.148 \text{ pu} \tag{7}$$

$$Y_{12} = Y_{23} = Y_{34} = \frac{1}{0.07 + j0.07} = 7.143 - j7.143 \text{ pu} \tag{8}$$

The diagonal (self-admittance) entries are:

$$Y_{11}^{(1)} = Y_{g1} + Y_{12} = -j3.148 + (7.143 - j7.143) = 7.143 - j10.291 \text{ pu} \tag{9}$$

$$Y_{22}^{(1)} = Y_{12} + Y_{23} = 14.286 - j14.286 \text{ pu} \tag{10}$$

$$Y_{33}^{(1)} = Y_{23} + Y_{34} = 14.286 - j14.286 \text{ pu} \tag{11}$$

$$Y_{44}^{(1)} = Y_{34} = 7.143 - j7.143 \text{ pu} \tag{12}$$

Off-diagonal (mutual admittance) terms:

$$Y_{12} = Y_{21} = Y_{23} = Y_{32} = Y_{34} = Y_{43} = -(7.143 - j7.143) = -7.143 + j7.143 \text{ pu} \tag{13}$$

The complete 4-bus positive-sequence Y_{bus} matrix is:

$$Y_{\text{bus}}^{(1)} = \begin{bmatrix} 7.143 - j10.291 & -7.143 + j7.143 & 0 & 0 \\ -7.143 + j7.143 & 14.286 - j14.286 & -7.143 + j7.143 & 0 \\ 0 & -7.143 + j7.143 & 14.286 - j14.286 & -7.143 + j7.143 \\ 0 & 0 & -7.143 + j7.143 & 7.143 - j7.143 \end{bmatrix} \text{pu} \tag{14}$$

D. Z_{bus} Matrix (Positive Sequence)

The bus impedance matrix is obtained by inverting $Y_{\text{bus}}^{(1)}$:

$$Z_{\text{bus}}^{(1)} = \left[Y_{\text{bus}}^{(1)}\right]^{-1} = \begin{bmatrix} j0.3176 & j0.3176 & j0.3176 & j0.3176 \\ j0.3176 & 0.07 + j0.3876 & 0.07 + j0.3876 & 0.07 + j0.3876 \\ j0.3176 & 0.07 + j0.3876 & 0.14 + j0.4576 & 0.14 + j0.4576 \\ j0.3176 & 0.07 + j0.3876 & 0.14 + j0.4576 & 0.21 + j0.5276 \end{bmatrix} \text{pu} \tag{15}$$

The Thévenin impedances seen from Bus-2 and Bus-3 are the diagonal elements:

$$Z_{22}^{(1)} = 0.07 + j0.3876 \text{ pu}, \qquad Z_{33}^{(1)} = 0.14 + j0.4576 \text{ pu} \tag{16}$$

V. Negative Sequence Network

Transmission lines and the transformer have identical positive and negative sequence impedances. The negative sequence network contains no internal voltage source but is otherwise structurally identical; therefore:

$$Z_{\text{bus}}^{(2)} = Z_{\text{bus}}^{(1)} \tag{17}$$

$$Z_{22}^{(2)} = 0.07 + j0.3876 \text{ pu}, \qquad Z_{33}^{(2)} = 0.14 + j0.4576 \text{ pu} \tag{18}$$

VI. Zero Sequence Network

A. Transformer Configuration and Zero Sequence Impedances

The transformer has a Δ–Y_g connection. The delta winding presents an open circuit to zero-sequence current from the generator side, blocking it entirely. The grounded-wye winding provides a zero-sequence current return path on the LV (feeder) side. The zero-sequence transformer impedance (converted to system base) is:

$$Z_T^{(0)} = j0.1676 \text{ pu} \tag{19}$$

Each line section has zero-sequence impedance:

$$Z_{12}^{(0)} = Z_{23}^{(0)} = Z_{34}^{(0)} = 0.14 + j0.14 \text{ pu} \tag{20}$$

B. Y_{bus} Formation (Zero Sequence)

Because the generator is blocked by the delta winding, Bus-1 connects to ground only through the transformer zero-sequence impedance $Z_T^{(0)}$:

$$Y_T^{(0)} = \frac{1}{Z_T^{(0)}} = \frac{1}{j0.1676} = -j5.967 \text{ pu} \tag{21}$$

The zero-sequence line admittances are:

$$Y_{12}^{(0)} = Y_{23}^{(0)} = Y_{34}^{(0)} = \frac{1}{0.14 + j0.14} = \frac{1 - j}{0.28} = 3.571 - j3.571 \text{ pu} \tag{22}$$

The diagonal entries are:

$$Y_{11}^{(0)} = Y_T^{(0)} + Y_{12}^{(0)} = -j5.967 + (3.571 - j3.571) = 3.571 - j9.538 \text{ pu} \tag{23}$$

$$Y_{22}^{(0)} = Y_{12}^{(0)} + Y_{23}^{(0)} = 7.142 - j7.142 \text{ pu} \tag{24}$$

$$Y_{33}^{(0)} = Y_{23}^{(0)} + Y_{34}^{(0)} = 7.142 - j7.142 \text{ pu} \tag{25}$$

$$Y_{44}^{(0)} = Y_{34}^{(0)} = 3.571 - j3.571 \text{ pu} \tag{26}$$

The complete 4-bus zero-sequence Y_{bus} matrix is:

$$Y_{\text{bus}}^{(0)} = \begin{bmatrix} 3.571 - j9.538 & -3.571 + j3.571 & 0 & 0 \\ -3.571 + j3.571 & 7.142 - j7.142 & -3.571 + j3.571 & 0 \\ 0 & -3.571 + j3.571 & 7.142 - j7.142 & -3.571 + j3.571 \\ 0 & 0 & -3.571 + j3.571 & 3.571 - j3.571 \end{bmatrix} \text{pu} \tag{27}$$

C. Z_{bus} Matrix (Zero Sequence)

The zero-sequence bus impedance matrix is obtained by inverting $Y_{\text{bus}}^{(0)}$:

$$Z_{\text{bus}}^{(0)} = \left[Y_{\text{bus}}^{(0)}\right]^{-1} = \begin{bmatrix} j0.1676 & j0.1676 & j0.1676 & j0.1676 \\ j0.1676 & 0.14 + j0.3076 & 0.14 + j0.3076 & 0.14 + j0.3076 \\ j0.1676 & 0.14 + j0.3076 & 0.28 + j0.4476 & 0.28 + j0.4476 \\ j0.1676 & 0.14 + j0.3076 & 0.28 + j0.4476 & 0.42 + j0.5876 \end{bmatrix} \text{pu} \tag{28}$$

The structure of $Z_{\text{bus}}^{(0)}$ confirms the expected pattern: the Bus-1 row/column is purely reactive (only transformer impedance to ground), and successive buses accumulate additional real and reactive line impedance. The Thévenin zero-sequence impedances at the fault buses are the diagonal elements:

$$Z_{22}^{(0)} = 0.14 + j0.3076 \text{ pu}, \qquad Z_{33}^{(0)} = 0.28 + j0.4476 \text{ pu} \tag{29}$$

VII. Three-Phase Fault Analysis

For a balanced three-phase fault at bus k, only the positive-sequence network is active. The Thévenin impedance seen from the fault point equals $Z_{kk}^{(1)}$:

$$I_f^{(3\phi)} = \frac{V_f}{Z_{kk}^{(1)}} \tag{30}$$

A. Three-Phase Fault at Bus-2

$$Z_{\text{th}}^{(1)} = Z_{22}^{(1)} = 0.07 + j0.3876 \text{ pu} \tag{31}$$

$$\left|Z_{\text{th}}^{(1)}\right| = \sqrt{0.07^2 + 0.3876^2} = \sqrt{0.0049 + 0.1502} = 0.3938 \text{ pu} \tag{32}$$

$$\angle Z_{\text{th}}^{(1)} = \arctan\left(\frac{0.3876}{0.07}\right) = 79.77^\circ \tag{33}$$

$$\boxed{I_{f2}^{(3\phi)} = \frac{1\angle 0^\circ}{0.3938\angle 79.77^\circ} = 2.539\angle -79.77^\circ \text{ pu}} \tag{34}$$

B. Three-Phase Fault at Bus-3

$$Z_{\text{th}}^{(1)} = Z_{33}^{(1)} = 0.14 + j0.4576 \text{ pu} \tag{35}$$

$$\left|Z_{\text{th}}^{(1)}\right| = \sqrt{0.14^2 + 0.4576^2} = \sqrt{0.0196 + 0.2094} = 0.4786 \text{ pu} \tag{36}$$

$$\angle Z_{\text{th}}^{(1)} = \arctan\left(\frac{0.4576}{0.14}\right) = 72.99^\circ \tag{37}$$

$$\boxed{I_{f3}^{(3\phi)} = \frac{1\angle 0^\circ}{0.4786\angle 72.99^\circ} = 2.090\angle -72.99^\circ \text{ pu}} \tag{38}$$

VIII. Single Line-to-Ground (SLG) Fault Analysis

For a single line-to-ground fault at bus k, all three sequence networks are connected in series:

$$I_f^{(\text{SLG})} = 3\, I_a^{(1)} = \frac{3\, V_f}{Z_{kk}^{(1)} + Z_{kk}^{(2)} + Z_{kk}^{(0)}} \tag{39}$$

A. SLG Fault at Bus-2

$$Z_1 = Z_{22}^{(1)} = 0.07 + j0.3876 \text{ pu} \tag{40}$$

$$Z_2 = Z_{22}^{(2)} = 0.07 + j0.3876 \text{ pu} \tag{41}$$

$$Z_0 = Z_{22}^{(0)} = 0.14 + j0.3076 \text{ pu} \tag{42}$$

$$\begin{aligned} Z_{\text{total}} &= Z_1 + Z_2 + Z_0 \\ &= (0.07 + 0.07 + 0.14) + j(0.3876 + 0.3876 + 0.3076) \\ &= 0.28 + j1.0828 \text{ pu} \end{aligned} \tag{43}$$

$$|Z_{\text{total}}| = \sqrt{0.28^2 + 1.0828^2} = \sqrt{0.0784 + 1.1725} = 1.1184 \text{ pu} \tag{44}$$

$$\boxed{I_{f2}^{(\text{SLG})} = \frac{3 \times 1\angle 0^\circ}{1.1184\angle 75.53^\circ} = 2.682\angle -75.53^\circ \text{ pu}} \tag{45}$$

B. SLG Fault at Bus-3

$$Z_1 = Z_{33}^{(1)} = 0.14 + j0.4576 \text{ pu} \tag{46}$$

$$Z_2 = Z_{33}^{(2)} = 0.14 + j0.4576 \text{ pu} \tag{47}$$

$$Z_0 = Z_{33}^{(0)} = 0.28 + j0.4476 \text{ pu} \tag{48}$$

$$\begin{aligned} Z_{\text{total}} &= Z_1 + Z_2 + Z_0 \\ &= (0.14 + 0.14 + 0.28) + j(0.4576 + 0.4576 + 0.4476) \\ &= 0.56 + j1.3628 \text{ pu} \end{aligned} \tag{49}$$

$$|Z_{\text{total}}| = \sqrt{0.56^2 + 1.3628^2} = \sqrt{0.3136 + 1.8572} = 1.4734 \text{ pu} \tag{50}$$

$$\boxed{I_{f3}^{(\text{SLG})} = \frac{3 \times 1\angle 0^\circ}{1.4734\angle 67.63^\circ} = 2.036\angle -67.63^\circ \text{ pu}} \tag{51}$$

IX. Table of Results

Table 3: Fault Current Summary (Per-Unit, S_{base} = 57 MVA, Transformer = 17 MVA)

Location	**Fault type**	$\boldsymbol{Z}_{\text{th}}$ **(pu)**	$\boldsymbol{I_f}$ **(pu, phasor)**	$\boldsymbol{\lvert I_f \rvert}$ **(pu)**
Bus-2	3-phase	$0.07 + j0.3876$	$2.539\angle -79.77^\circ$	2.539
Bus-2	SLG	$0.28 + j1.0828$	$2.682\angle -75.53^\circ$	**2.682**
Bus-3	3-phase	$0.14 + j0.4576$	$2.090\angle -72.99^\circ$	2.090
Bus-3	SLG	$0.56 + j1.3628$	$2.036\angle -67.63^\circ$	2.036

Task (b): Simulation-Based Verification

In this task, the radial distribution feeder supplied by a 33/11 kV step-down transformer (17 MVA) is modelled in Simulink. Balanced three-phase faults and unbalanced SLG faults are applied at Bus-2 and Bus-3, and the resulting fault currents are recorded and compared against the analytically computed values of Task (a).

I. System Description and Simulation Setup

A. Transmission Line Impedance Conversion

The Simulink *Distributed Parameters Line* block requires physical impedance values in Ω/km and H/km. The per-unit impedances are first converted to actual values using the LV-side base impedance.

Base Impedance

$$Z_{\text{base}} = \frac{V_{\text{base,LV}}^2}{S_{\text{base}}} = \frac{(11 \times 10^3)^2}{57 \times 10^6} = 2.1228\ \Omega \tag{52}$$

Actual Positive-Sequence Impedance per Section

$$R_{\text{line}}^{(1)} = 0.07 \times 2.1228 = 0.1486\ \Omega \tag{53}$$

$$X_{\text{line}}^{(1)} = 0.07 \times 2.1228 = 0.1486\ \Omega \tag{54}$$

Actual Zero-Sequence Impedance per Section

$$R_{\text{line}}^{(0)} = 0.14 \times 2.1228 = 0.2972\ \Omega \tag{55}$$

$$X_{\text{line}}^{(0)} = 0.14 \times 2.1228 = 0.2972\ \Omega \tag{56}$$

Determination of Line Length per Section

With system frequency $f = 50$ Hz ($\omega = 2\pi \times 50 = 314.16$ rad/s):

$$r_1 = 0.1486\ \Omega/\text{km}, \quad r_0 = 0.2972\ \Omega/\text{km} \tag{57}$$

$$l_1 = 4.73 \times 10^{-4}\ \text{H/km}, \quad l_0 = 9.46 \times 10^{-4}\ \text{H/km} \tag{58}$$

The inductive reactances per km are:

$$x_1 = 314.16 \times 4.73 \times 10^{-4} = 0.1486\ \Omega/\text{km} \tag{59}$$

$$x_0 = 314.16 \times 9.46 \times 10^{-4} = 0.2972\ \Omega/\text{km} \tag{60}$$

The complete line parameter conversion is summarised in Table 4.

Table 4: Transmission Line Parameter Conversion Summary (ℓ = 1.0 km/section, Z_{base} = 2.1228 Ω)

Parameter	**Seq.**	**pu value**	**Actual (Ω)**	**Simulink (per km)**
Resistance R	+/-	0.07	0.1486 Ω	0.1486 Ω/km
Resistance R	0	0.14	0.2972 Ω	0.2972 Ω/km
Reactance X	+/-	0.07	0.1486 Ω	$l_1 = 4.73 \times 10^{-4}$ H/km
Reactance X	0	0.14	0.2972 Ω	$l_0 = 9.46 \times 10^{-4}$ H/km

B. Load Active Power Calculation

Three loads are connected along the feeder at 11 kV with rated currents of 150 A, 100 A, and 200 A. Assuming unity power factor ($\cos\phi = 1$):

$$P = \sqrt{3}\, V_L\, I_L\, \cos\phi \tag{61}$$

Load at Bus-2 (150 A):

$$P_1 = \sqrt{3} \times 11 \times 10^3 \times 150 = 2{,}858{,}846\ \text{W} \approx \mathbf{2.86}\ \text{MVA} \tag{62}$$

Load at Bus-3 (100 A):

$$P_2 = \sqrt{3} \times 11 \times 10^3 \times 100 = 1{,}905{,}897\ \text{W} \approx \mathbf{1.91}\ \text{MVA} \tag{63}$$

Load at Bus-4 (200 A):

$$P_3 = \sqrt{3} \times 11 \times 10^3 \times 200 = 3{,}811{,}794\ \text{W} \approx \mathbf{3.81}\ \text{MVA} \tag{64}$$

II. Simulink Model: Single Line Diagram

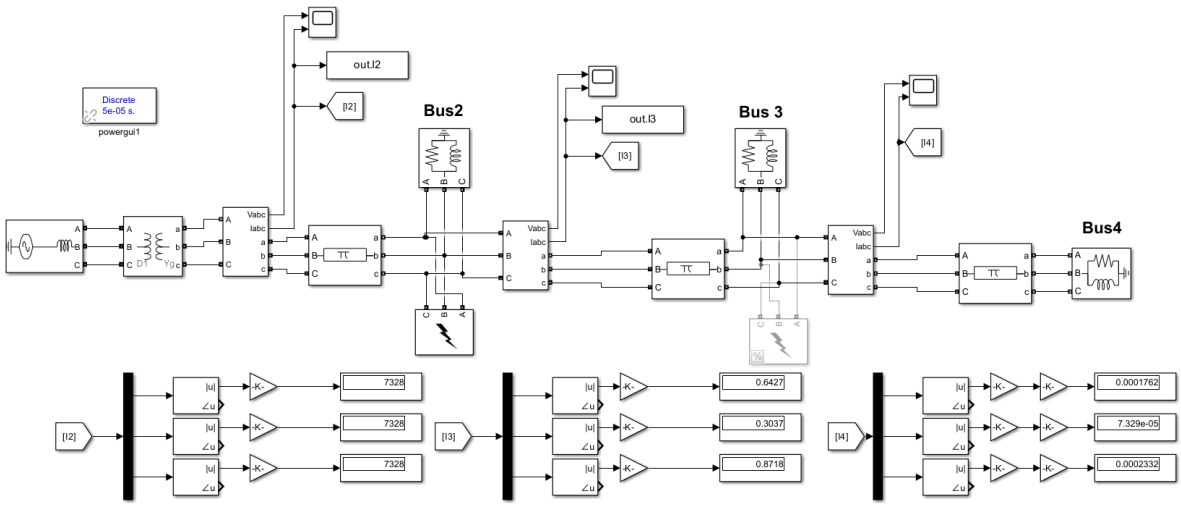

Figure 2: MATLAB/Simulink single-line diagram of the BREB radial distribution feeder model for fault analysis at Bus-2 and Bus-3.

III. Simulation Results

A. Three-Phase Fault at Bus-2

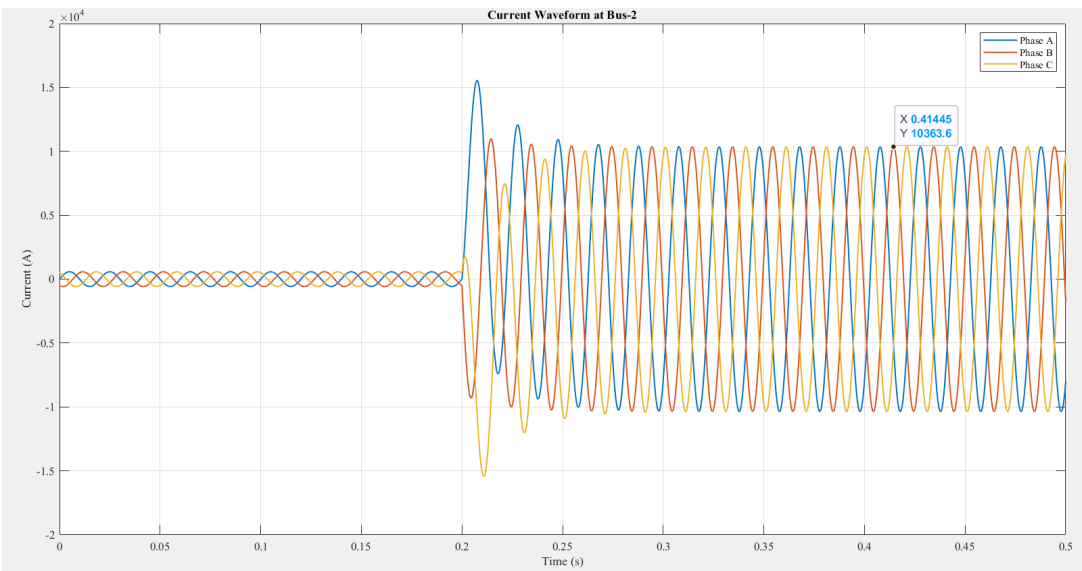

Figure 3: Simulink waveform: Three-Phase Fault at Bus-2.

A bolted three-phase fault applied at Bus-2 yields a steady-state fault current of approximately **7328 A** (RMS), as shown in Fig. 3. The waveform confirms symmetric, balanced currents in all three phases, consistent with the nature of a three-phase bolted fault.

B. Single-Line-to-Ground Fault at Bus-2

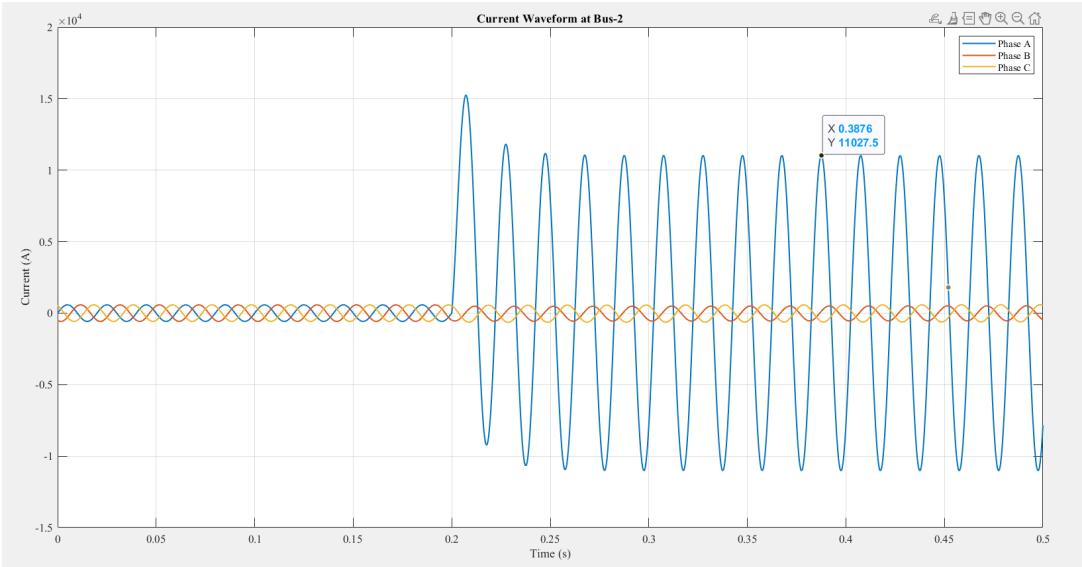

Figure 4: Simulink waveform: Single-Line-to-Ground Fault at Bus-2.

The SLG fault at Bus-2 produces a fault current of approximately **7799 A**, as shown in Fig. 4. Only the faulted phase carries the fault current, while the remaining two phases return to near-normal levels, confirming the unbalanced nature of the fault.

C. Three-Phase Fault at Bus-3

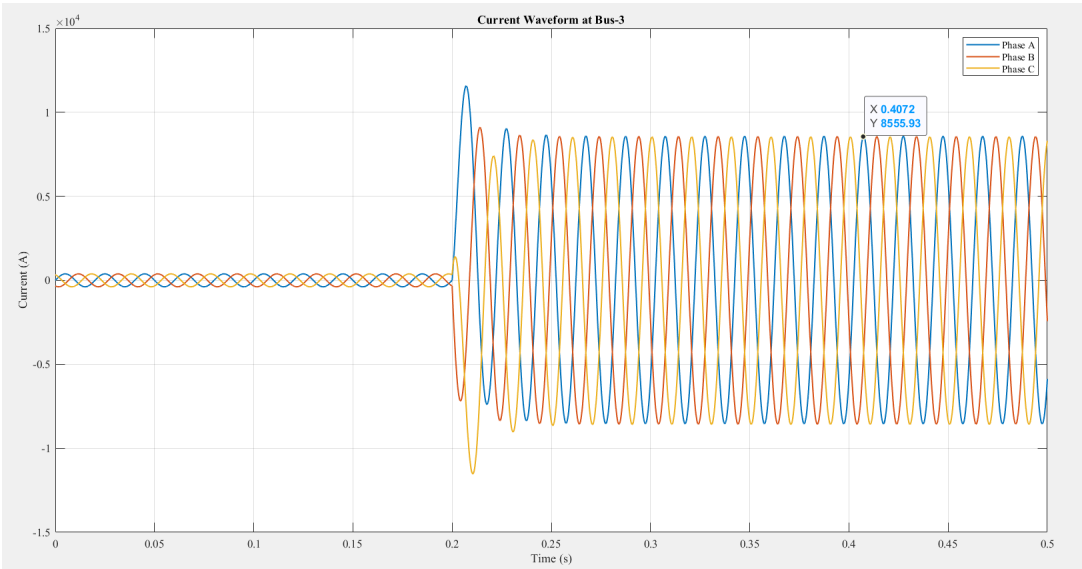

Figure 5: Simulink waveform: Three-Phase Fault at Bus-3.

The three-phase fault at Bus-3 yields a fault current of **6051 A**, as shown in Fig. 5. The reduced current compared to Bus-2 is expected due to the higher cumulative impedance along the feeder from the source to Bus-3.

D. Single-Line-to-Ground Fault at Bus-3

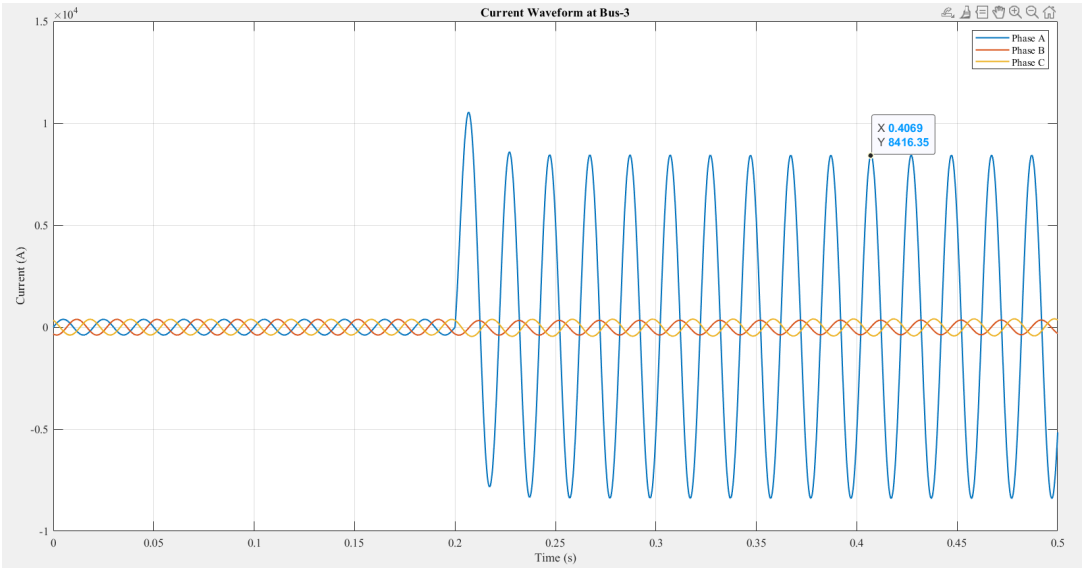

Figure 6: Simulink waveform: Single-Line-to-Ground Fault at Bus-3.

The SLG fault at Bus-3 produces a fault current of approximately **5949 A**, as shown in Fig. 6.

IV. Comparison of Analytical and Simulation Results

A. Peak-to-RMS Conversion of Simulation Results

Table 5: Simulation Results: Peak-to-RMS Fault Current Conversion

Location	**Fault Type**	$I_{f,\text{peak}}^{\text{sim}}$ **(A)**	$I_{f,\text{rms}}^{\text{sim}} = I_{\text{peak}}/\sqrt{2}$ **(A)**
Bus-2	3-Phase	10,361	7,328
Bus-2	SLG	11,030	7,799
Bus-3	3-Phase	8,558	6,051
Bus-3	SLG	8,413	5,949

Peak values read directly from Simulink waveforms.

B. Per-Unit to Actual Current Conversion

Table 6: Analytical Results: Per-Unit to Actual Fault Current Conversion ($I_{\text{base,LV}} = 2991.75$ A)

Location	**Fault Type**	$\lvert I_f \rvert_{\text{pu}}$	$I_{\text{base,LV}}$ **(A)**	I_f^{actual} **(A)**
Bus-2	3-Phase	2.539	2991.75	7,594.9
Bus-2	SLG	2.682	2991.75	8,022.3
Bus-3	3-Phase	2.090	2991.75	6,252.8
Bus-3	SLG	2.036	2991.75	6,091.1

C. Comparison Table

The analytical per-unit fault currents are converted to actual amperes using:

$$I_f^{\text{actual}} = \lvert I_f \rvert_{\text{pu}} \times I_{\text{base,LV}} \tag{65}$$

where $I_{\text{base,LV}} = 2991.75$ A.

Table 7: Comparison of Analytical and Simulation Fault Currents

Bus	**Fault Type**	$\lvert I_f \rvert$ **(pu)**	$I_f^{\text{analytical}}$ **(A)**	$I_f^{\text{simulation}}$ **(A)**	**Error (%)**
Bus-2	3ϕ	2.539	7594.9	7328	3.51
Bus-2	SLG	2.682	8022.3	7799	2.78
Bus-3	3ϕ	2.090	6252.8	6051	3.23
Bus-3	SLG	2.036	6091.1	5949	2.33

$I_{\text{base,LV}} = 2991.75$ A; $S_{\text{base}} = 57$ MVA; Transformer = 17 MVA.

The percentage error is computed as:

$$\epsilon\,(\%) = \frac{\left| I_f^{\text{analytical}} - I_f^{\text{simulation}} \right|}{I_f^{\text{analytical}}} \times 100 \tag{66}$$

All percentage errors are within 4%, confirming satisfactory agreement between the two methods.

Task (c): Actual Fault Current Calculation and Protection Equipment Selection

I. Load Current at Each Protection Point

The line currents flowing through CB2 and CB3 are determined by summing the downstream load currents:

$$I_{L,\text{CB2}} = 150 + 100 + 200 = 450 \text{ A} \tag{67}$$

$$I_{L,\text{CB3}} = 100 + 200 = 300 \text{ A} \tag{68}$$

Table 8: Load Current Summary at Protection Points

Location	**Downstream Loads**	I_{load} **(A)**	$I_{f,\max}$ **(A)**
CB2 (Bus-2)	150 + 100 + 200 A	450	7,799 (SLG)
CB3 (Bus-3)	100 + 200 A	300	6,051 (3ϕ)

II. Current Transformer (CT) Selection

A. Selection Criteria

CT Primary Rating: The CT primary is rated at 125% of normal load current:

$$I_{CT,\text{primary}} \geq 1.25 \times I_{L,\text{normal}} \tag{69}$$

The factor of **1.25** provides a 25% margin above normal load, ensuring the CT operates within its linear measurement range and does not approach saturation during routine overloads.

Accuracy Limit Factor (ALF):

$$\text{ALF} \times I_{CT,\text{primary}} \geq I_{f,\max} \tag{70}$$

Selecting $\text{ALF}_{\text{std}} > \text{ALF}_{\text{req}}$ ensures the CT does not saturate under maximum fault current, preserving relay measurement integrity.

B. CT at CB2 (Bus-2)

$$I_{CT,\text{primary}} \geq 1.25 \times 450 = 562.5 \text{ A} \;\Rightarrow\; \textbf{Selected: 600/5 A} \tag{71}$$

$$\text{ALF}_{\text{req}} = \frac{7799}{600} = 13.0 \;\Rightarrow\; \text{Standard ALF} = 20 \text{ is sufficient} \tag{72}$$

C. CT at CB3 (Bus-3)

$$I_{CT,\text{primary}} \geq 1.25 \times 300 = 375 \text{ A} \;\Rightarrow\; \textbf{Selected: 400/5 A} \tag{73}$$

$$\text{ALF}_{\text{req}} = \frac{6051}{400} = 15.1 \;\Rightarrow\; \text{Standard ALF} = 20 \text{ is sufficient} \tag{74}$$

Table 9: Selected CT Ratios and Saturation Verification

Location	I_{load} **(A)**	$1.25 \times I_{\text{load}}$ **(A)**	**CT Ratio**	$I_{f,\text{max}}$ **(A)**	$\textbf{ALF}_{\textbf{req}}$	$\textbf{ALF}_{\textbf{std}}$
CB2 (Bus-2)	450	562.5	600/5	7,799	13.0	20
CB3 (Bus-3)	300	375.0	400/5	6,051	15.1	20

CT class: 5P20; $\text{ALF}_{\text{std}} = 20 > \text{ALF}_{\text{req}}$ confirms no saturation during worst-case fault.

III. Circuit Breaker Selection

A. Selection Criteria

Rated Voltage:

$$V_{\text{rated}} \geq 1.1 \times V_{\text{system}} = 1.1 \times 11 = 12.1 \text{ kV} \;\Rightarrow\; \text{Standard 12 kV class selected} \tag{75}$$

The 1.1 factor accounts for temporary overvoltages and switching surges during normal operation and fault clearance.

Continuous Current Rating:

$$I_{\text{rated}} \geq 1.25 \times I_{L,\text{normal}} \tag{76}$$

The **1.25 multiplier** provides a 25% margin to accommodate load growth, harmonic content, and contact thermal ageing.

Short-Circuit Breaking Capacity:

$$I_{sc} \geq I_{f,\text{max}} \tag{77}$$

A standard higher tier (16 kA) is selected to account for asymmetrical fault peaks and future increases in source fault level.

B. CB2 at Bus-2

$$V_{\text{rated}} \geq 12.1 \text{ kV} \Rightarrow \textbf{12 kV Vacuum Circuit Breaker} \tag{78}$$

$$I_{\text{rated}} \geq 562.5 \text{ A} \Rightarrow \textbf{Selected: 630 A} \tag{79}$$

$$I_{sc} \geq 7.799 \text{ kA} \Rightarrow \textbf{Selected: 16 kA breaking capacity} \tag{80}$$

C. CB3 at Bus-3

$$V_{\text{rated}} \geq 12.1 \text{ kV} \Rightarrow \textbf{12 kV Vacuum Circuit Breaker} \tag{81}$$

$$I_{\text{rated}} \geq 375 \text{ A} \Rightarrow \textbf{Selected: 400 A} \tag{82}$$

$$I_{sc} \geq 6.051 \text{ kA} \Rightarrow \textbf{Selected: 16 kA breaking capacity} \tag{83}$$

Table 10: Selected Circuit Breakers for CB2 and CB3

CB	**Type**	V_{rated}	I_{rated}	I_{sc} **(kA)**	$I_{f,\max}$ **(kA)**	**Safety Margin**
CB2 (Bus-2)	12 kV VCB	12 kV	630 A	16 kA	7.80	105%
CB3 (Bus-3)	12 kV VCB	12 kV	400 A	16 kA	6.05	164%

VCB = Vacuum Circuit Breaker; Safety Margin = $(I_{sc} - I_{f,\max})/I_{f,\max} \times 100\%$.

Reference: Schneider Electric Evolis/VM1 12 kV series (available in Bangladesh market).

D. Justification of Equipment Selection

1. **Voltage class:** Both breakers are rated at 12 kV per IEC 62271-100, providing a 9% insulation margin above system voltage.
2. **Continuous current:** CB2 at 630 A covers the 450 A load with a 40% margin; CB3 at 400 A covers 300 A with a 33% margin.
3. **Short-circuit breaking:** The 16 kA rating exceeds the maximum fault currents of 7.80 kA at CB2 and 6.05 kA at CB3 by factors of 2.1 and 2.6 respectively.
4. **Technology:** VCBs are preferred due to low maintenance, fast interruption time (40–60 ms), long mechanical life (>10,000 operations), and wide availability in the Bangladesh distribution market.

IV. Summary of Selected Protection Equipment

Table 11: Complete Protection Equipment Summary for Bus-2 and Bus-3

Equipment	**Parameter**	**CB2 (Bus-2)**	**CB3 (Bus-3)**
Current Transformer	CT Ratio	600/5 A	400/5 A
	Class	5P20	5P20
	ALF (std / req)	20 / 13.0	20 / 15.1
Circuit Breaker	Type	12 kV VCB	12 kV VCB
	Rated Current	630 A	400 A
	Breaking Capacity	16 kA	16 kA
	Safety Margin	105%	164%

Task (d): Overcurrent Relay Design and Performance Verification

I. Relay Characteristic Selection

The IEC Standard Inverse (SI) IDMT characteristic is selected for both relays R2 and R3:

$$t = \frac{0.14 \times TDS}{M^{0.02} - 1} \tag{84}$$

where $M = I_f / I_{\text{pickup}}$ is the Plug Setting Multiplier (PSM) and TDS is the Time Dial Setting.

II. CT Secondary Currents

All primary currents are referred to the CT secondary side using:

$$I_{\text{secondary}} = I_{\text{primary}} \times \frac{5}{CT_{\text{primary}}} \tag{85}$$

Table 12: Primary to CT Secondary Current Conversion

Relay	**CT Ratio**	I_{load} **(A)**	$I_{\text{load,sec}}$ **(A)**	$I_{f,\text{max}}$ **(A)**	$I_{f,\text{max,sec}}$ **(A)**
R2 (Bus-2)	600/5	450	3.75	7799	64.99
R3 (Bus-3)	400/5	300	3.75	6051	75.64

III. Pickup Current Setting

The pickup current must satisfy:

$$I_{\text{pickup}} > 1.25 \times I_{\text{load,sec}} \qquad \text{(must not pick up on load)} \tag{86}$$

A. Pickup for R2 (Bus-2)

$$I_{\text{pickup,R2}} > 1.25 \times 3.75 = 4.69 \text{ A} \;\Rightarrow\; \textbf{Selected: 5 A (secondary)} \tag{87}$$

$$I_{\text{pickup,R2,primary}} = 5 \times \frac{600}{5} = \textbf{600 A} \tag{88}$$

B. Pickup for R3 (Bus-3)

$$I_{\text{pickup,R3}} > 1.25 \times 3.75 = 4.69 \text{ A} \Rightarrow \textbf{Selected: 5 A (secondary)} \tag{89}$$

$$I_{\text{pickup,R3,primary}} = 5 \times \frac{400}{5} = \textbf{400 A} \tag{90}$$

IV. Plug Setting Multiplier [4] (PSM) Calculation

$$M = \frac{I_{f,\text{secondary}}}{I_{\text{pickup,secondary}}} \tag{91}$$

A. PSM for R2 at Maximum Fault Current

$$M_{R2} = \frac{64.99}{5} = \textbf{13.0} \tag{92}$$

B. PSM for R3 at Maximum Fault Current

$$M_{R3} = \frac{75.64}{5} = \textbf{15.13} \tag{93}$$

V. Operating Time Assignment and Coordination

In a radial feeder, the downstream relay (R3) operates first, followed by R2 after a Coordination Time Interval (CTI):

$$t_{R2} = t_{R3} + \text{CTI} = t_{R3} + 0.3 \text{ s} \tag{94}$$

$$t_{R3} = \textbf{0.3 s} \quad \text{(target at maximum Bus-3 fault)} \tag{95}$$

$$t_{R2} = 0.3 + 0.3 = \textbf{0.6 s} \quad \text{(target at maximum Bus-2 fault)} \tag{96}$$

VI. Time Dial Setting (TDS) Calculation

Rearranging Eq. (84):

$$TDS = \frac{t \times (M^{0.02} - 1)}{0.14} \tag{97}$$

A. TDS for R3

$$M_{R3}^{0.02} = 15.13^{0.02} = e^{0.02 \times 2.717} = 1.0559 \tag{98}$$

$$TDS_{R3} = \frac{0.3 \times 0.0559}{0.14} = 0.1198 \Rightarrow \textbf{Round up: } TDS_{R3} = \textbf{0.125} \tag{99}$$

B. TDS for R2

$$M_{R2}^{0.02} = 13.0^{0.02} = e^{0.02\times 2.565} = 1.0527 \tag{100}$$

$$TDS_{R2} = \frac{0.6 \times 0.0527}{0.14} = 0.2259 \;\Rightarrow\; \textbf{Round up: } TDS_{R2} = \mathbf{0.25} \tag{101}$$

VII. Verification at Minimum Fault Current

A. Verification of R3 (Bus-3, 3ϕ)

$$I_{\text{sec}} = 6051 \times \frac{5}{400} = 75.64 \text{ A} \qquad M_{R3} = \frac{75.64}{5} = 15.13 \tag{102}$$

$$t_{R3} = \frac{0.14 \times 0.125}{15.13^{0.02} - 1} = \frac{0.0175}{0.0559} = \mathbf{0.313\ s}\checkmark \tag{103}$$

B. Verification of R2 – Coordination Check (Bus-3 fault)

R2 sees the Bus-3 fault current of 6051 A:

$$I_{\text{sec,R2}} = 6051 \times \frac{5}{600} = 50.43 \text{ A} \qquad M_{R2} = \frac{50.43}{5} = 10.09 \tag{104}$$

$$t_{R2} = \frac{0.14 \times 0.25}{10.09^{0.02} - 1} = \frac{0.035}{0.0466} = \mathbf{0.751\ s} \tag{105}$$

$$\Delta t = 0.751 - 0.313 = \mathbf{0.438\ s} > 0.3 \text{ s}\checkmark \tag{106}$$

VIII. Simulink Model: Overcurrent Relay Implementation

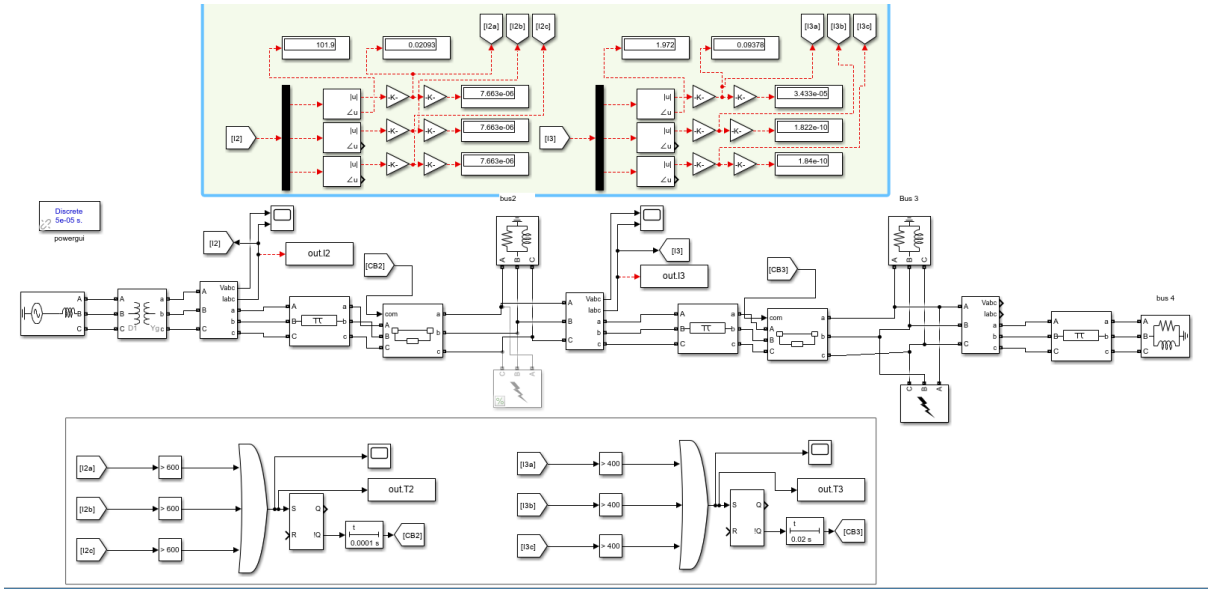

Figure 7: MATLAB/Simulink model of the BREB radial distribution feeder with overcurrent relay protection at Bus-2 (R2) and Bus-3 (R3).

IX. Simulation Results

A. Time–Current Characteristic (TCC) Curve

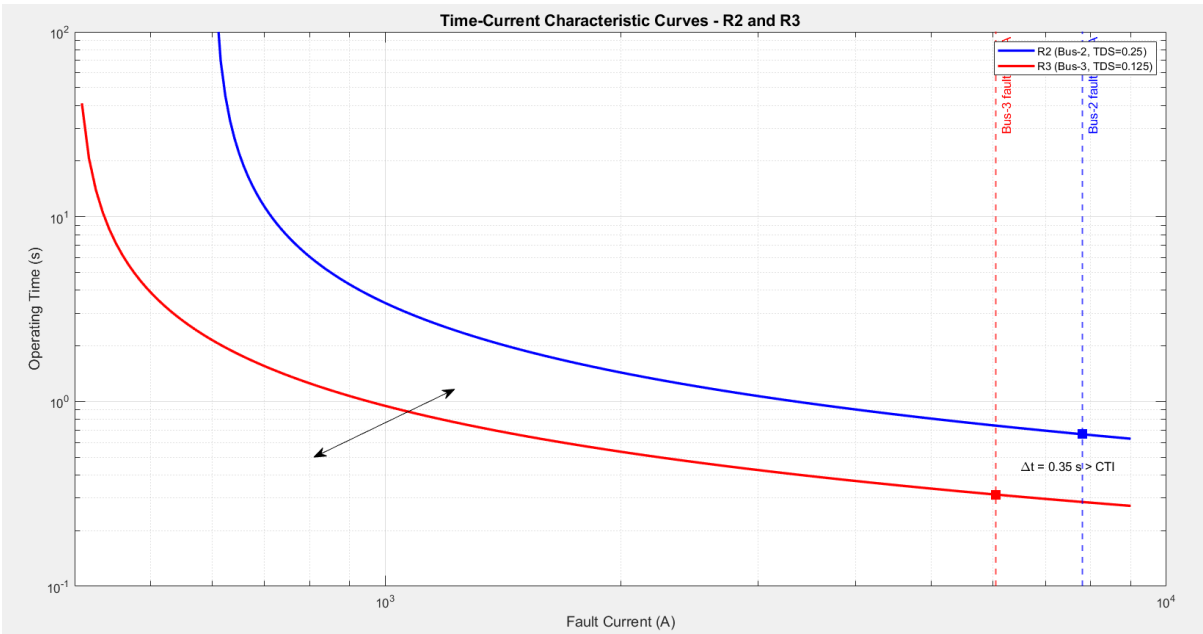

Figure 8: Time–Current Characteristic (TCC) curves for R2 (Bus-2, TDS = 0.25) and R3 (Bus-3, TDS = 0.125) using IEC Standard Inverse IDMT characteristic, confirming coordination time interval Δt = 0.438 s > CTI = 0.3 s.

B. Fault Response at Bus-3 (3ϕ Fault – R3 Primary, R2 Backup)

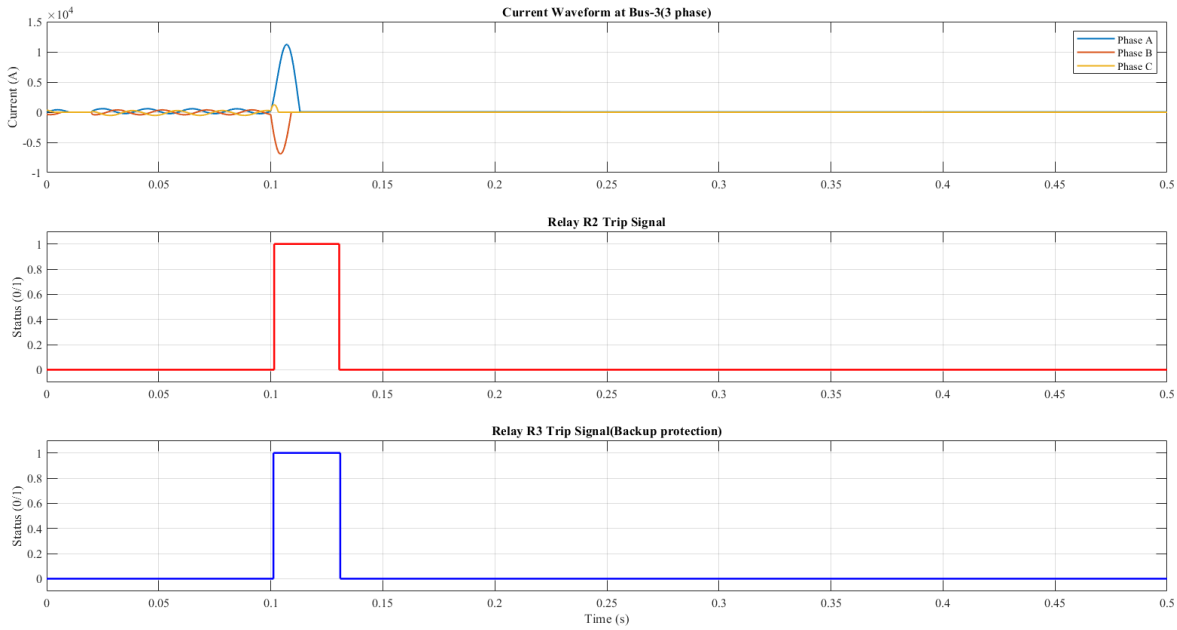

Figure 9: Simulink fault response for three-phase fault at Bus-3: phase currents at R3 location (top), R3 trip signal at $t \approx 0.40$ s (middle), and R2 current confirming R2 does not trip (bottom).

C. Fault Response at Bus-3 (SLG Fault – R3 Primary, R2 Backup)

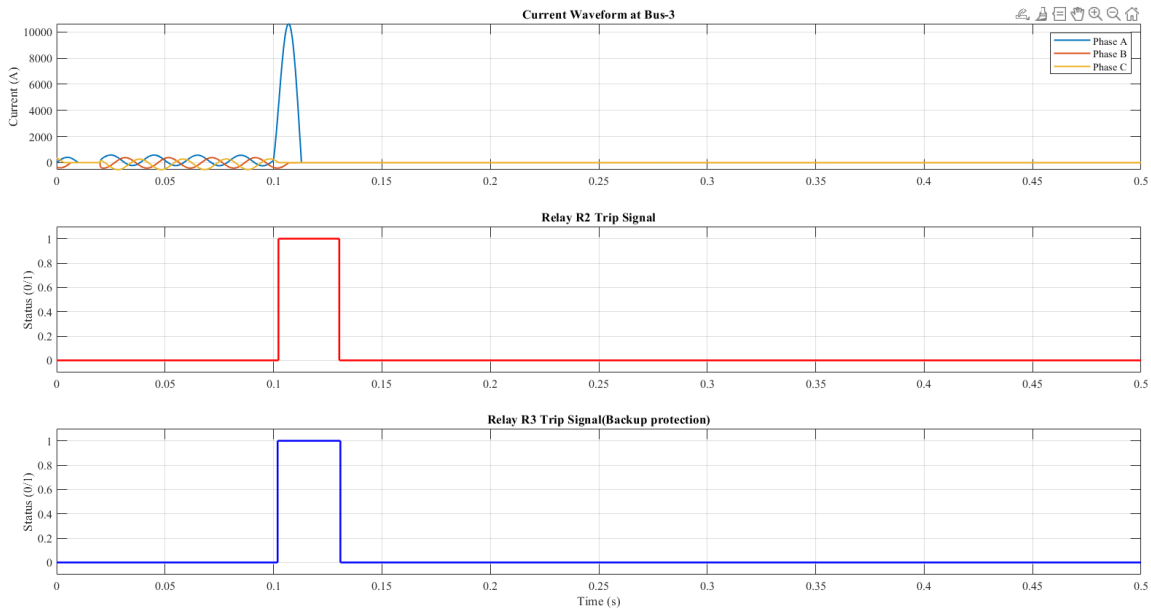

Figure 10: Simulink fault response for SLG fault at Bus-3: faulted phase current at R3 location (top), R3 trip signal (middle), and R2 reset confirmation (bottom).

D. Fault Response at Bus-2 (3ϕ Fault – R2 Primary Protection)

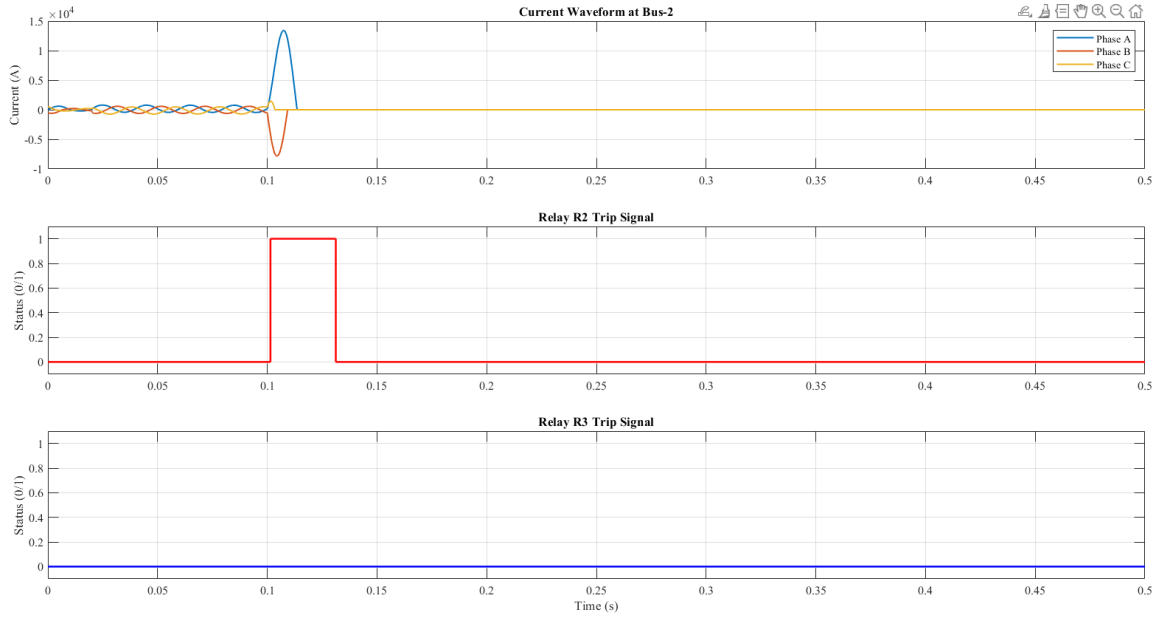

Figure 11: Simulink fault response for three-phase fault at Bus-2: phase currents at R2 location (top), R2 trip signal at $t \approx 0.70$ s (middle), and R3 confirming no unwanted trip (bottom).

E. Fault Response at Bus-2 (SLG Fault – R2 Primary Protection)

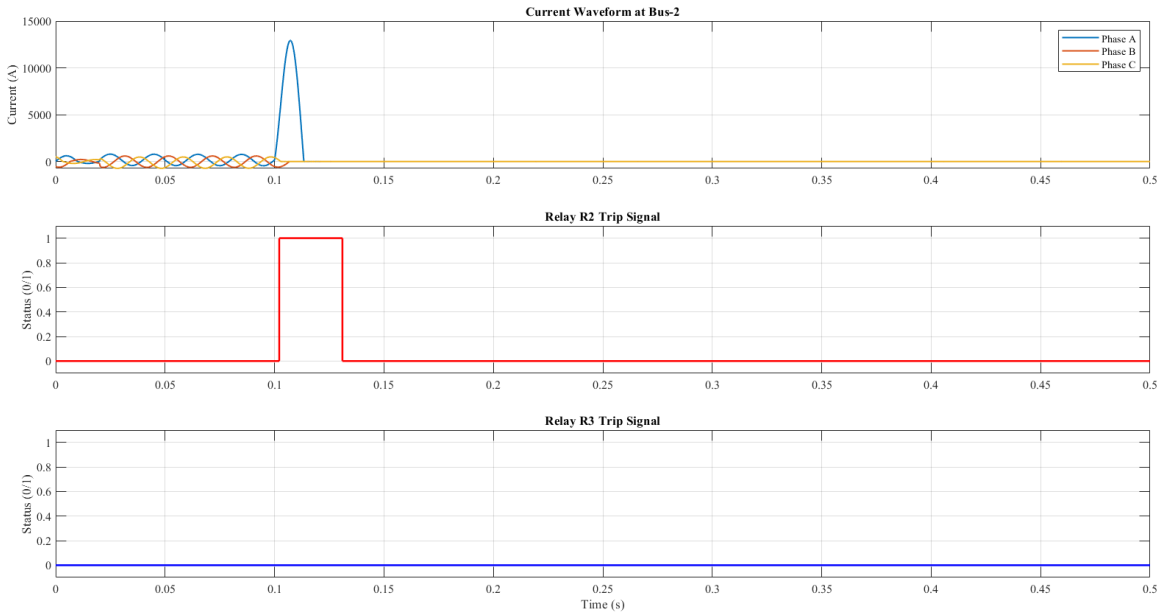

Figure 12: Simulink fault response for SLG fault at Bus-2: faulted phase current at R2 location (top) and R2 trip signal (bottom).

X. Relay Settings and Coordination Summary

Table 13: Complete Overcurrent Relay Settings for R2 and R3

Parameter	**R2 (Bus-2)**	**R3 (Bus-3)**
CT Ratio	600/5 A	400/5 A
Relay Characteristic	IEC SI IDMT	IEC SI IDMT
Pickup I_p (secondary)	5 A	5 A
Pickup I_p (primary)	600 A	400 A
TDS	0.25	0.125
PSM at max fault	13.0	15.13
Operating time at max fault	0.6 s	0.3 s
Operating time at min fault	0.751 s	0.313 s
Coordination margin	0.438 s > CTI	—

Conclusion

This study presents a complete fault analysis and protection design for a BREB radial distribution feeder. Analytical calculations, simulation-based verification, and protection equipment selection were carried out systematically. The results confirm that the designed overcurrent relay scheme with properly coordinated IDMT characteristics provides fast, selective, and reliable fault clearance, ensuring safe and uninterrupted operation of the distribution system under fault conditions.

References

[1] Bangladesh Rural Electrification Board, "Standard framework for technical specifications of distribution system materials," tech. rep., BREB, Dhaka, Bangladesh, 2023. Technical Specification for 11kV/33kV Line Construction Materials.

[2] P. M. Anderson, *Analysis of Faulted Power Systems*. IEEE Press, 1995.

[3] C. L. Fortescue, "Method of symmetrical co-ordinates applied to the solution of polyphase networks," *Transactions of the American Institute of Electrical Engineers*, vol. 37, no. 2, pp. 1027–1140, 1918.

[4] J. L. Blackburn and T. J. Domin, *Protective Relaying: Principles and Applications*. CRC press, 2014.